MITSUBISHI ELECTRIC

SPLIT-TYPE, AIR CONDITIONERS

March 2018

SERVICE MANUAL

Series PLY Ceiling Cassettes R410A

Indoor unit

[Model Name]	[Service Ref.]
PLY-SP18EA	PLY-SP18EA.TH(-TH/-NE/-VN)
PLY-SP24EA	PLY-SP24EA.TH(-TH/-NE/-VN)
PLY-SP30EA	PLY-SP30EA.TH(-TH/-NE/-VN)
PLY-SP36EA	PLY-SP36EA.TH(-TH/-NE/-VN)
PLY-SP42EA	PLY-SP42EA.TH(-TH/-NE/-VN)
PLY-SP48EA	PLY-SP48EA.TH(-TH/-NE/-VN)

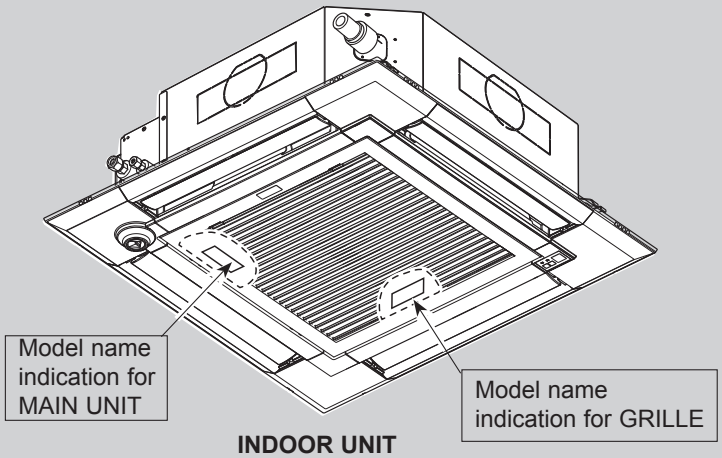

Mr.SLIM

REFERENCE MANUAL

OUTDOOR UNIT'S SERVICE MANUAL

Service Ref	Service Manual No.
SUY-SA18/24/30VA2.TH(-TH/-NE/-VN)	-
PUY-SP36/42/48VKA2.TH(-TH/-NE/-VN) PUY-SP36/42/48YKA2.TH(-TH/-NE/-VN)	-

PARTS NAMES AND FUNCTIONS

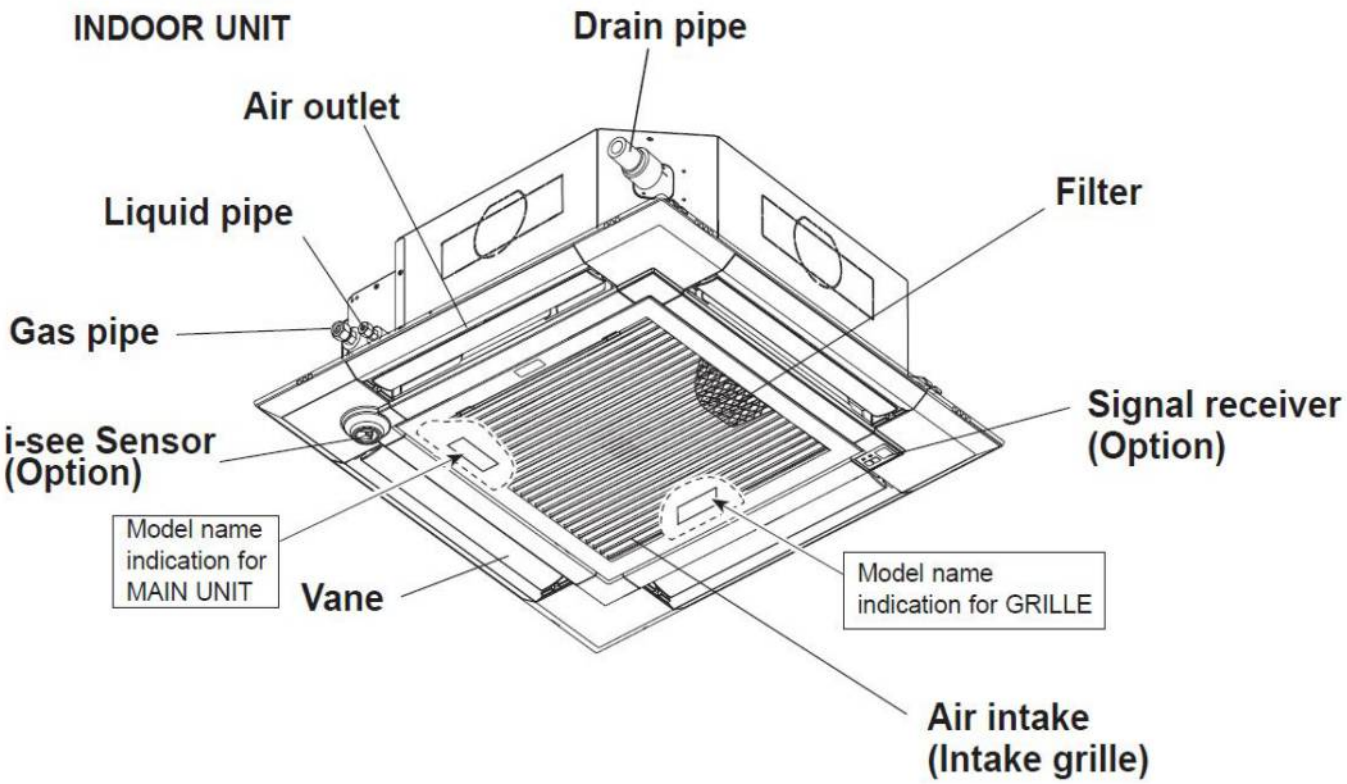

SPECIFICATIONS

INDOOR UNIT	**Service Ref.**				**PLY-SP18EA.TH(-TH/-NE/-VN)**
	Mode				Cooling
	Power supply (phase, cycle, voltage)				Single phase, 50Hz, 220-240 V/Single phase, 60Hz, 220-230 V
		Input		kW	0.03
		Running current		A	0.33
	External finish (Grille)				Munsell 1.0Y 9.2/0.2
	Heat exchanger				Plate fin coil
	Fan	Fan (drive) × No.			Turbo fan (direct) × 1
		Fan motor output		W	50
		Airflow (Low-Medium2-Medium1-High)		m³/min	14-16-17-18
		External static pressure		Pa	0(direct blow)
	Booster heater			kW	–
	Operation control & Thermostat				Remote controller & built-in
	Noise level SPL(Low-Medium2-Medium1-High)			dB(A)	27-29-31-32
	Field drain pipe O.D.			mm	32
	Dimensions		W	mm	UNIT : 840 GRILLE : 950
			D	mm	UNIT : 840 GRILLE : 950
			H	mm	UNIT : 258 GRILLE : 40
	Weight			kg	UNIT : 19 GRILLE : 5

INDOOR UNIT	**Service Ref.**				**PLY-SP24EA.TH(-TH/-NE/-VN)**
	Mode				Cooling
	Power supply (phase, cycle, voltage)				Single phase, 50Hz, 220-240 V/Single phase, 60Hz, 220-230 V
		Input		kW	0.04
		Running current		A	0.43
	External finish (Grille)				Munsell 1.0Y 9.2/0.2
	Heat exchanger				Plate fin coil
	Fan	Fan (drive) × No.			Turbo fan (direct) × 1
		Fan motor output		W	50
		Airflow (Low-Medium2-Medium1-High)		m³/min	16-17-19-21
		External static pressure		Pa	0(direct blow)
	Booster heater			kW	–
	Operation control & Thermostat				Remote controller & built-in
	Noise level SPL(Low-Medium2-Medium1-High)			dB(A)	28-30-32-35
	Field drain pipe O.D.			mm	32
	Dimensions		W	mm	UNIT : 840 GRILLE : 950
			D	mm	UNIT : 840 GRILLE : 950
			H	mm	UNIT : 258 GRILLE : 40
	Weight			kg	UNIT : 21 GRILLE : 5

INDOOR UNIT	**Service Ref.**				**PLY-SP30EA.TH(-TH/-NE/-VN)**
	Mode				Cooling
	Power supply (phase, cycle, voltage)				Single phase, 50Hz, 220-240 V/Single phase, 60Hz, 220-230 V
		Input		kW	0.08
		Running current		A	0.73
	External finish (Grille)				Munsell 1.0Y 9.2/0.2
	Heat exchanger				Plate fin coil
	Fan	Fan (drive) × No.			Turbo fan (direct) × 1
		Fan motor output		W	120
		Airflow (Low-Medium2-Medium1-High)		m³/min	19-23-26-29
		External static pressure		Pa	0(direct blow)
	Booster heater			kW	–
	Operation control & Thermostat				Remote controller & built-in
	Noise level SPL(Low-Medium2-Medium1-High)			dB(A)	31-34-37-41
	Field drain pipe O.D.			mm	32
	Dimensions		W	mm	UNIT : 840 GRILLE : 950
			D	mm	UNIT : 840 GRILLE : 950
			H	mm	UNIT : 298 GRILLE : 40
	Weight			kg	UNIT : 24 GRILLE : 5

INDOOR UNIT	**Service Ref.**				**PLY-SP36EA.TH(-TH/-NE/-VN)**
	Mode				Cooling
	Power supply (phase, cycle, voltage)				Single phase, 50Hz, 220-240 V/Single phase, 60Hz, 220-230 V
		Input		kW	0.09
		Running current		A	0.91
	External finish (Grille)				Munsell 1.0Y 9.2/0.2
	Heat exchanger				Plate fin coil
	Fan	Fan (drive) × No.			Turbo fan (direct) × 1
		Fan motor output		W	120
		Airflow (Low-Medium2-Medium1-High)		m³/min	21-25-28-31
		External static pressure		Pa	0(direct blow)
	Booster heater			kW	–
	Operation control & Thermostat				Remote controller & built-in
	Noise level SPL(Low-Medium2-Medium1-High)			dB(A)	32-37-41-43
	Field drain pipe O.D.			mm	32
	Dimensions		W	mm	UNIT : 840 GRILLE : 950
			D	mm	UNIT : 840 GRILLE : 950
			H	mm	UNIT : 298 GRILLE : 40
	Weight			kg	UNIT : 27 GRILLE : 5

INDOOR UNIT	**Service Ref.**				**PLY-SP42EA.TH(-TH/-NE/-VN)**
	Mode				Cooling
	Power supply (phase, cycle, voltage)				Single phase, 50Hz, 220-240 V/Single phase, 60Hz, 220-230 V
		Input		kW	0.10
		Running current		A	0.99
	External finish (Grille)				Munsell 1.0Y 9.2/0.2
	Heat exchanger				Plate fin coil
	Fan	Fan (drive) × No.			Turbo fan (direct) × 1
		Fan motor output		W	120
		Airflow (Low-Medium2-Medium1-High)		m³/min	21-25-28-32
		External static pressure		Pa	0(direct blow)
	Booster heater			kW	–
	Operation control & Thermostat				Remote controller & built-in
	Noise level SPL(Low-Medium2-Medium1-High)			dB(A)	32-37-41-44
	Field drain pipe O.D.			mm	32
	Dimensions		W	mm	UNIT : 840 GRILLE : 950
			D	mm	UNIT : 840 GRILLE : 950
			H	mm	UNIT : 298 GRILLE : 40
	Weight			kg	UNIT : 27 GRILLE : 5

INDOOR UNIT	**Service Ref.**				**PLY-SP48EA.TH(-TH/-NE/-VN)**
	Mode				Cooling
	Power supply (phase, cycle, voltage)				Single phase, 50Hz, 220-240 V/Single phase, 60Hz, 220-230 V
		Input		kW	0.10
		Running current		A	0.99
	External finish (Grille)				Munsell 1.0Y 9.2/0.2
	Heat exchanger				Plate fin coil
	Fan	Fan (drive) × No.			Turbo fan (direct) × 1
		Fan motor output		W	120
		Airflow (Low-Medium2-Medium1-High)		m³/min	24-26-29-32
		External static pressure		Pa	0(direct blow)
	Booster heater			kW	–
	Operation control & Thermostat				Remote controller & built-in
	Noise level SPL(Low-Medium2-Medium1-High)			dB(A)	36-39-42-44
	Field drain pipe O.D.			mm	32
	Dimensions		W	mm	UNIT : 840 GRILLE : 950
			D	mm	UNIT : 840 GRILLE : 950
			H	mm	UNIT : 298 GRILLE : 40
	Weight			kg	UNIT : 27 GRILLE : 5

OUTLINES AND DIMENSIONS

PLY-SP18EA.TH(-TH/-NE/-VN) **PLY-SP24EA.TH(-TH/-NE/-VN)**
PLY-SP30EA.TH(-TH/-NE/-VN) **PLY-SP36EA.TH(-TH/-NE/-VN)**
PLY-SP42EA.TH(-TH/-NE/-VN) **PLY-SP48EA.TH(-TH/-NE/-VN)**

Unit: mm

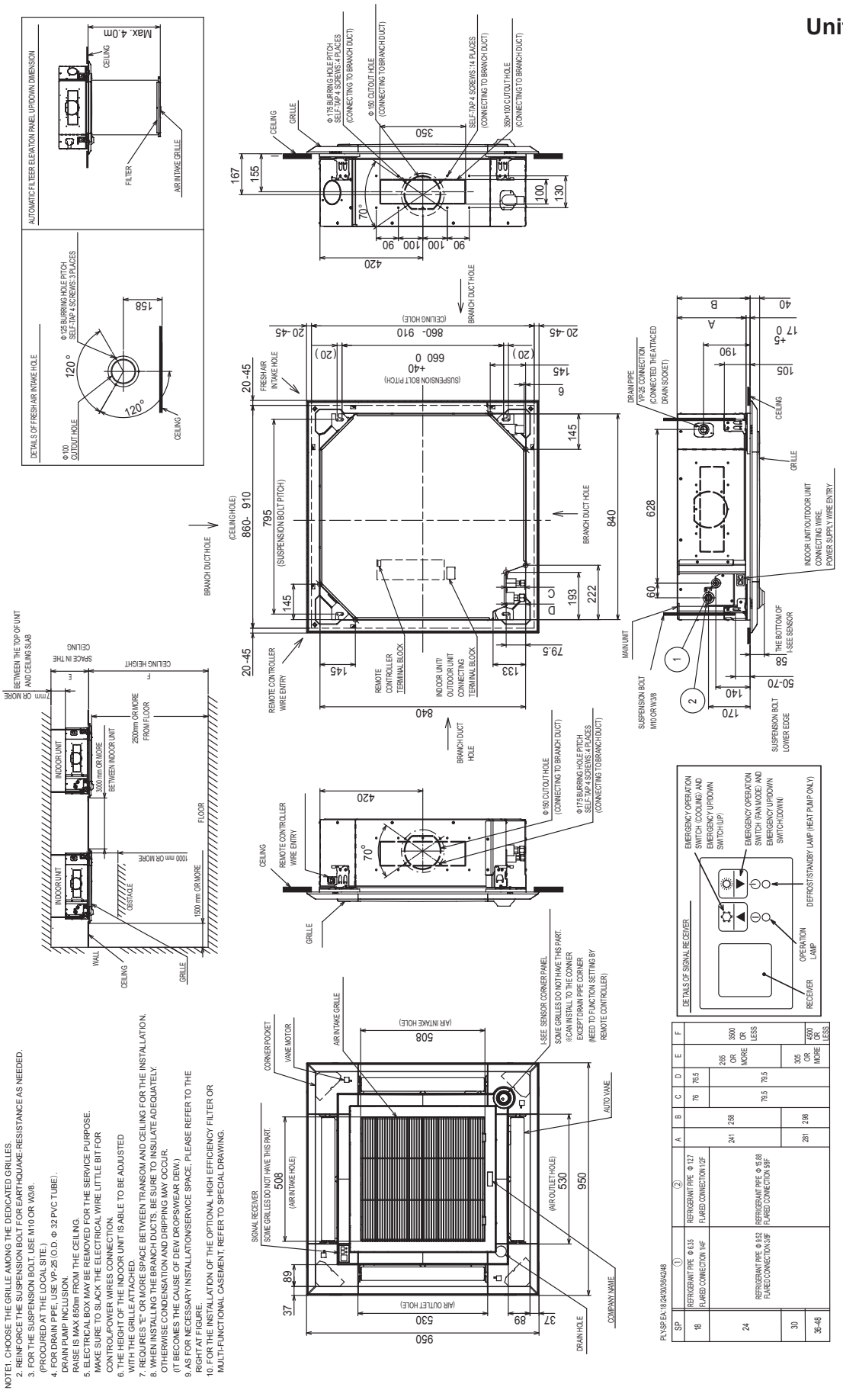

NOTE1. CHOOSE THE GRILLE AMONG THE DEDICATED GRILLES.
2. REINFORCE THE SUSPENSION BOLT FOR EARTHQUAKE-RESISTANCE AS NEEDED.
3. FOR THE SUSPENSION BOLT, USE M10 OR W3/8.
(PROCURED AT THE LOCAL SITE.)
4. FOR DRAIN PIPE, USE VP-25 (O.D. Φ 32 PVC TUBE).
DRAIN PUMP INCLUSION.
RAISE IS MAX 850mm FROM THE CEILING.
5. ELECTRICAL BOX MAY BE REMOVED FOR THE SERVICE PURPOSE.
MAKE SURE TO SLACK THE ELECTRICAL WIRE LITTLE BIT FOR CONTROL/POWER WIRES CONNECTION.
6. THE HEIGHT OF THE INDOOR UNIT IS ABLE TO BE ADJUSTED WITH THE GRILLE ATTACHED.
7. REQUIRES "E" OR MORE SPACE BETWEEN TRANSOM AND CEILING FOR THE INSTALLATION.
8. WHEN INSTALLING THE BRANCH DUCTS, BE SURE TO INSULATE ADEQUATELY. OTHERWISE CONDENSATION AND DRIPPING MAY OCCUR.
(IT BECOMES THE CAUSE OF DEW DROPS/WEAR DEW.)
9. AS FOR NECESSARY INSTALLATION/SERVICE SPACE, PLEASE REFER TO THE RIGHT AT FIGURE.
10. FOR THE INSTALLATION OF THE OPTIONAL HIGH EFFICIENCY FILTER OR MULTI-FUNCTIONAL CASEMENT, REFER TO SPECIAL DRAWING.

PLY-SP EA.TH/-2A/-3D/-5A/-6A/-8A

SP	①	②	A	B	C	D	E	F
18	REFRIGERANT PIPE Φ 6.35 FLARED CONNECTION 1/4F	REFRIGERANT PIPE Φ 12.7 FLARED CONNECTION 1/2F	241	238	76	76.5	265 OR MORE	3600 OR LESS
24	REFRIGERANT PIPE Φ 9.52 FLARED CONNECTION 3/8F	REFRIGERANT PIPE Φ 15.88 FLARED CONNECTION 5/8F			79.5	79.5		
30			281	298			305 OR MORE	4500 OR LESS
36-48								

WIRING DIAGRAM

PLY-SP18EA.TH **PLY-SP24EA.TH** **PLY-SP30EA.TH**
PLY-SP36EA.TH **PLY-SP42EA.TH** **PLY-SP48EA.TH**
PLY-SP18EA.TH-NE **PLY-SP24EA.TH-NE** **PLY-SP30EA.TH-NE**
PLY-SP36EA.TH-NE **PLY-SP42EA.TH-NE** **PLY-SP48EA.TH-NE**

[LEGEND]

SYMBOL	NAME
I.B	INDOOR CONTROLLER BOARD
CN2L	CONNECTOR (LOSSNAY)
CN32	CONNECTOR (REMOTE SWITCH)
CN41	CONNECTOR (HA TERMINAL-A)
CN51	CONNECTOR (CENTRALLY CONTROL)
CN105	CONNECTOR (IT TERMINAL)
F1	FUSE (T6.3AL250V)
LED1	POWER SUPPLY (I.B)
LED2	POWER SUPPLY (R.B)
LED3	TRANSMISSION (INDOOR-OUTDOOR)
SW1	SWITCH (MODEL SELECTION) Refer to <Table 1>.
SW2	SWITCH (CAPACITY CODE) Refer to <Table 2>.
SWE	CONNECTOR (EMERGENCY OPERATION)
DP	DRAIN PUMP
FS	DRAIN FLOAT SWITCH
MF	FAN MOTOR
MV	VANE MOTOR

SYMBOL	NAME
TB4	TERMINAL BLOCK (INDOOR/OUTDOOR CONNECTING LINE)
TB5,TB6	TERMINAL BLOCK (REMOTE CONTROLLER TRANSMISSION LINE)
TH1	ROOM TEMP. THERMISTOR (0°C / 15kΩ, 25°C / 5. 4kΩ DETECT)
TH2	PIPE TEMP. THERMISTOR/LIQUID (0°C / 15kΩ, 25°C / 5. 4kΩ DETECT)
TH5	COND. / EVA. TEMP. THERMISTOR (0°C / 15kΩ, 25°C / 5. 4kΩ DETECT)
R.B	WIRED REMOTE CONTROLLER
OPTION PART	
W.B	PCB OF SIGNAL RECEIVER
BZ	BUZZER
LED1	LED (OPERATION INDICATION : GREEN)
LED2	LED (PREPARATION FOR HEATING : ORANGE) [HEAT PUMP ONLY]
RU	RECEIVING UNIT
SW1	EMERGENCY OPERATION (FAN / DOWN)
SW2	EMERGENCY OPERATION (COOL / UP)
MT	I-SEE SENSOR MOTOR
TB2	TERMINAL BLOCK (INDOOR UNIT POWER AND TRANSMISSION LINE)

<Table 1> SW1 (MODEL SELECTION)

MODELS	Manufacture/Service
PLY-SP.EA	1 2 3 4 5 6 ON OFF

<Table 2> SW2 (CAPACITY CODE)

CAPACITY	Manufacture/Service	CAPACITY	Manufacture/Service
18	1 2 3 4 5 ON OFF	36	1 2 3 4 5 ON OFF
24	1 2 3 4 5 ON OFF	42	1 2 3 4 5 ON OFF
30	1 2 3 4 5 ON OFF	48	1 2 3 4 5 ON OFF

The black square (■) indicates a switch position.

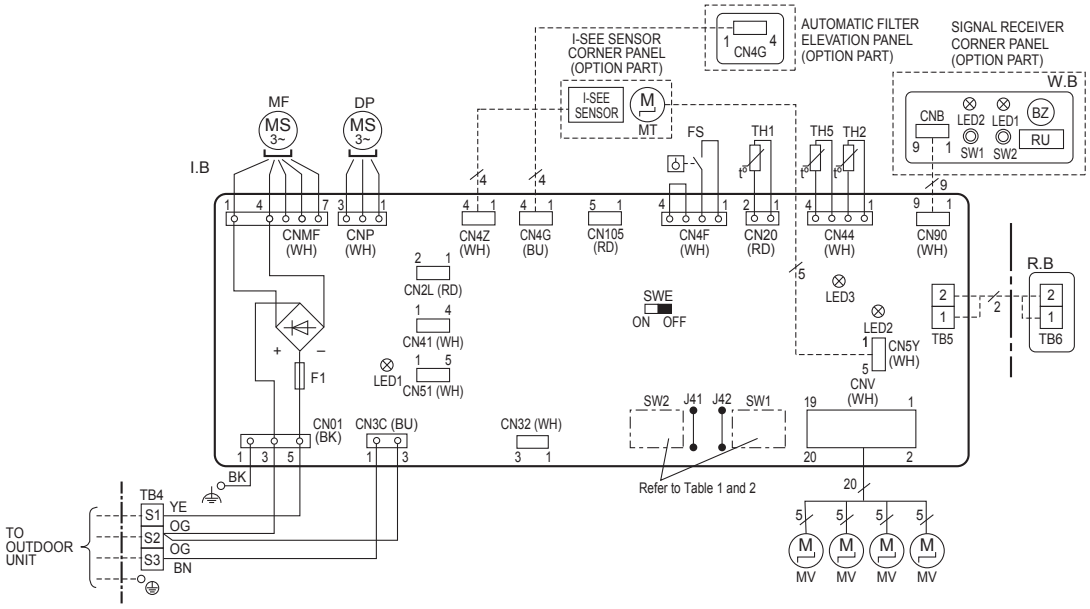

Notes: 1. Symbols used in wiring diagram above are, ▭▭▭:Terminal (block), ⊙⊙⊙:Connector.
2. Indoor and outdoor connecting wires are made with polarities, make wiring matching terminal numbers (S1, S2, S3).
3. Since the outdoor side electric wiring may change be sure to check the outdoor unit electric wiring for servicing.
4. This diagram shows the wiring of indoor and outdoor connecting wires (specification of 220-240V), adopting superimposed system of power and signal.
- If the separate indoor/outdoor unit power supplied system is applied, refer to Fig 2.
- For power supply system of this unit, refer to the caution label located near this diagram.

<Fig. 2>

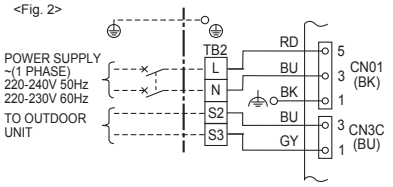

<Fig. 1> **Caution when connecting the remote controller cable to the terminal block TB5**

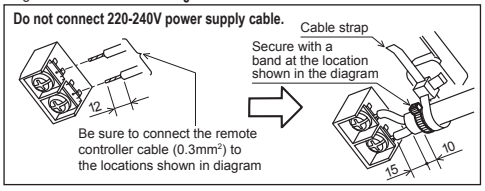

[Self-diagnosis]
1. For details on how to operate self-diagnosis with the wireless remote controller,refer to the technical manuals etc.

Check code	Symptom	Check code	Symptom
P1	Abnormality of room temperature thermistor (TH1).	PB(Pb)	Indoor unit fan motor error.
P2	Abnormality of pipe temperature thermistor / Liquid (TH2).	PL	Refrigerant circuit abnormal.
P4	Float switch connector open (FS).	E0~E5	Abnormality of the signal transmission between remote controller and indoor unit.
P5	Malfunction of Drain pump.		
P6	Freezing / overheating protection is working.	E6~EF	Abnormality of the signal transmission between indoor unit and outdoor unit.
P8	Abnormality of pipe temperature.		
P9	Abnormality of pipe temperature thermistor / Cond. /Eva. (TH5).	FB(Fb)	Abnormality of indoor controller board.
		U*, F*	Abnormality in outdoor unit. Refer to outdoor unit wiring diagram.
PA	Leakage error (refrigerant system)		

PLY-SP18EA.TH-TH PLY-SP24EA.TH-TH PLY-SP30EA.TH-TH
PLY-SP36EA.TH-TH PLY-SP42EA.TH-TH PLY-SP48EA.TH-TH
PLY-SP18EA.TH-VN PLY-SP24EA.TH-VN PLY-SP30EA.TH-VN
PLY-SP36EA.TH-VN PLY-SP42EA.TH-VN PLY-SP48EA.TH-VN

[LEGEND]

SYMBOL	NAME
I.B	INDOOR CONTROLLER BOARD
CN2L	CONNECTOR (LOSSNAY)
CN32	CONNECTOR (REMOTE SWITCH)
CN41	CONNECTOR (HA TERMINAL-A)
CN51	CONNECTOR (CENTRALLY CONTROL)
CN105	CONNECTOR (IT TERMINAL)
F1	FUSE (T6,3AL250V)
LED1	POWER SUPPLY (I.B)
LED2	POWER SUPPLY (R.B)
LED3	TRANSMISSION (INDOOR-OUTDOOR)
SW1	SWITCH (MODEL SELECTION) Refer to <Table 1>.
SW2	SWITCH (CAPACITY CODE) Refer to <Table 2>.
SWE	CONNECTOR (EMERGENCY OPERATION)
DP	DRAIN PUMP
FS	DRAIN FLOAT SWITCH
MF	FAN MOTOR
MV	VANE MOTOR

SYMBOL	NAME
TB4	TERMINAL BLOCK (INDOOR/OUTDOOR CONNECTING LINE)
TB5,TB6	TERMINAL BLOCK (REMOTE CONTROLLER TRANSMISSION LINE)
TH1	ROOM TEMP. THERMISTOR (0°C / 15kΩ, 25°C / 5. 4kΩ DETECT)
TH2	PIPE TEMP. THERMISTOR/LIQUID (0°C / 15kΩ, 25°C / 5. 4kΩ DETECT)
TH5	COND. / EVA. TEMP. THERMISTOR (0°C / 15kΩ, 25°C / 5. 4kΩ DETECT)
R.B	WIRED REMOTE CONTROLLER
OPTION PART	
W.B	PCB OF SIGNAL RECEIVER
BZ	BUZZER
LED1	LED (OPERATION INDICATION : GREEN)
LED2	LED (PREPARATION FOR HEATING : ORANGE) [HEAT PUMP ONLY]
RU	RECEIVING UNIT
SW1	EMERGENCY OPERATION (FAN / DOWN)
SW2	EMERGENCY OPERATION (COOL / UP)
MT	I-SEE SENSOR MOTOR
TB2	TERMINAL BLOCK (INDOOR UNIT POWER AND TRANSMISSION LINE)

<Table 1> SW1 (MODEL SELECTION)

MODELS	Manufacture/Service
PLY-SP.EA	1 2 3 4 5 6 ON OFF

<Table 2> SW2 (CAPACITY CODE)

CAPACITY	Manufacture/Service	CAPACITY	Manufacture/Service
18	1 2 3 4 5 ON OFF	36	1 2 3 4 5 ON OFF
24	1 2 3 4 5 ON OFF	42	1 2 3 4 5 ON OFF
30	1 2 3 4 5 ON OFF	48	1 2 3 4 5 ON OFF

The black square (■) indicates a switch position.

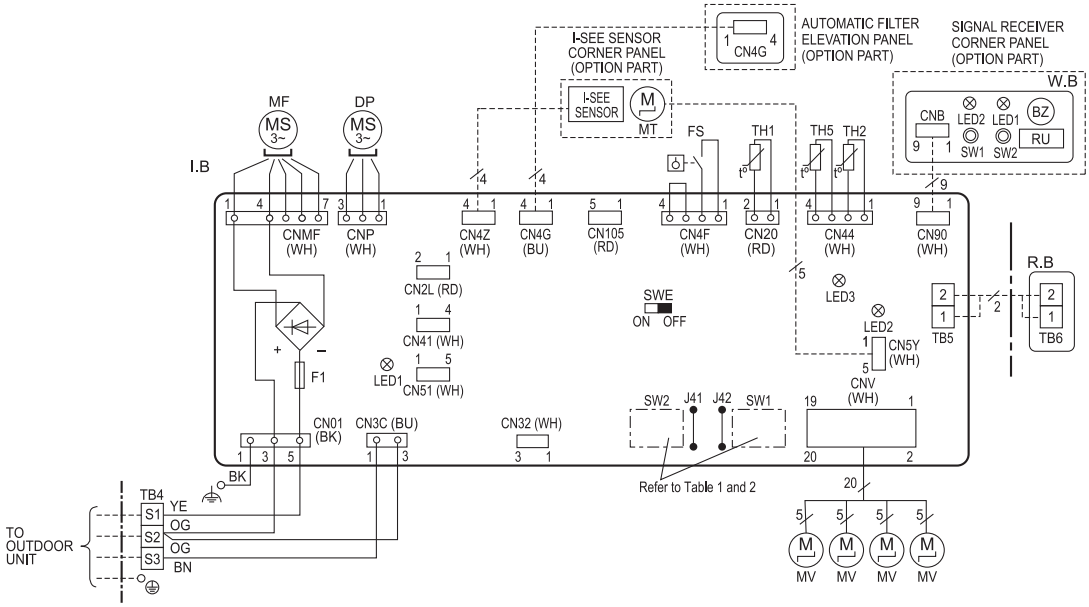

Notes: 1. Symbols used in wiring diagram above are, □□□:Terminal (block), ○○○:Connector.
2. Indoor and outdoor connecting wires are made with polarities, make wiring matching terminal numbers (S1, S2, S3).
3. Since the outdoor side electric wiring may change be sure to check the outdoor unit electric wiring for servicing.
4. This diagram shows the wiring of indoor and outdoor connecting wires (specification of 220V), adopting superimposed system of power and signal.
- If the separate indoor/outdoor unit power supplied system is applied, refer to Fig 2.
- For power supply system of this unit, refer to the caution label located near this diagram.

<Fig. 2>

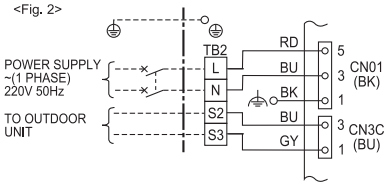

<Fig. 1> **Caution when connecting the remote controller cable to the terminal block TB5**

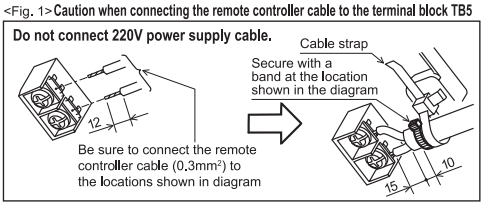

[Self-diagnosis]

1. For details on how to operate self-diagnosis with the wireless remote controller,refer to the technical manuals etc.

Check code	Symptom	Check code	Symptom
P1	Abnormality of room temperature thermistor (TH1).	PB(Pb)	Indoor unit fan motor error.
P2	Abnormality of pipe temperature thermistor / Liquid (TH2).	PL	Refrigerant circuit abnormal.
P4	Float switch connector open (FS).	E0~E5	Abnormality of the signal transmission between remote controller and indoor unit.
P5	Malfunction of Drain pump.		
P6	Freezing / overheating protection is working.	E6~EF	Abnormality of the signal transmission between indoor unit and outdoor unit.
P8	Abnormality of pipe temperature.		
P9	Abnormality of pipe temperature thermistor / Cond. /Eva. (TH5).	FB(Fb)	Abnormality of indoor controller board.
		U*, F*	Abnormality in outdoor unit. Refer to outdoor unit wiring diagram.
PA	Leakage error (refrigerant system)		

REFRIGERANT SYSTEM DIAGRAM

PLY-SP18EA.TH(-TH/-NE/-VN)
PLY-SP30EA.TH(-TH/-NE/-VN)
PLY-SP42EA.TH(-TH/-NE/-VN)
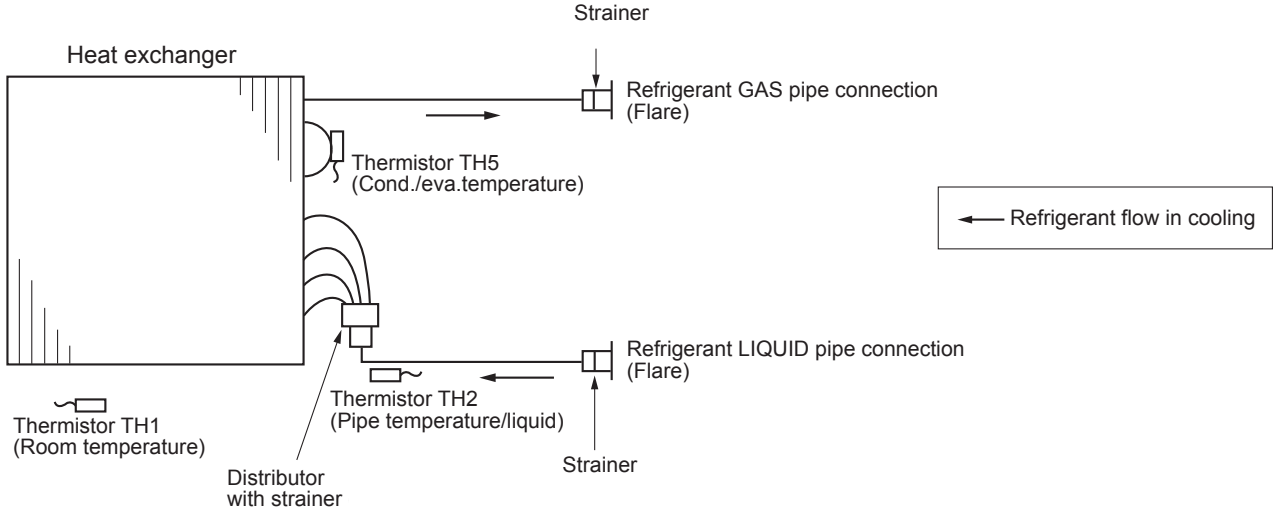
PLY-SP24EA.TH(-TH/-NE/-VN)
PLY-SP36EA.TH(-TH/-NE/-VN)
PLY-SP48EA.TH(-TH/-NE/-VN)